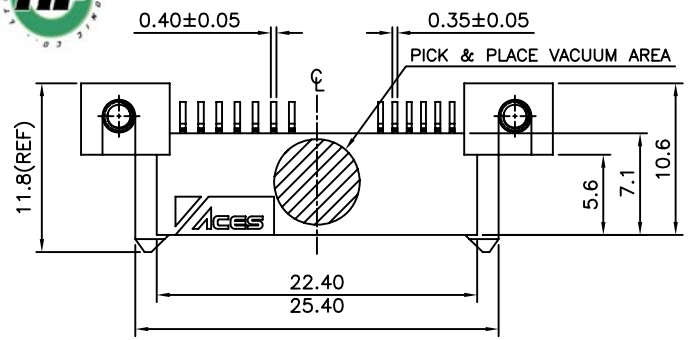

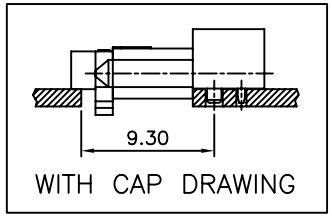

NOTES:
1. MATERIAL:
   1.1 HOUSING: HALOGEN FREE PLASTIC,UL94V-0; COLOR:BLACK.
   1.2 CONTACT: PHOSPHOR BRONZE
   1.3 BOARD LOCK: BRASS
   1.4 NUT: COPPER ALLOY
2. FINISH:
   2.1 CONTACT:
   PLATING 50u"MIN. NICKEL PLATING OVERALL
   P: 100u" MIN MATT TIN PLATING ON SOLDER TAIL
   GOLD FLASH(1~3u") PLATING ON CONTACT AREA
   S: 100u" MIN MATT TIN PLATING ON SOLDER TAIL
   15u" MIN. GOLD PLATING ON CONTACT AREA
   2.2 BOARD LOCK:
   100u" MIN. TIN PLATING ON SOLDER TAILS,
   50u" MIN. NICKEL UNDERPLATING OVERALL.
   2.3 NUT:
   50u" MIN. NICKEL UNDERPLATING OVERALL.
3. REFLOW SOLDER CAPABLE TO 260° C
   PER ACES SPEC.
4. SPEC. PLS. REFER TO PS-50861-XXXXX-XXX
5. PACKAGE PLS. REFER TO 91930-XXXXX-TRP
6. PART NUMBER
   50870-XXX X X-XXX

NO OF CKT
013 : 13PIN

PACKING
0:TAPE & REEL WITHOUT COVER
7:TAPE & REEL WITH COVER

PLATING
P: GOLD FLASH ON CONTACT FOR MATT TIN
S: 15u" GOLD ON CONTACT FOR MATT TIN

NO.	HOUSING COLOR	Halogen Free
001	BLACK	Y

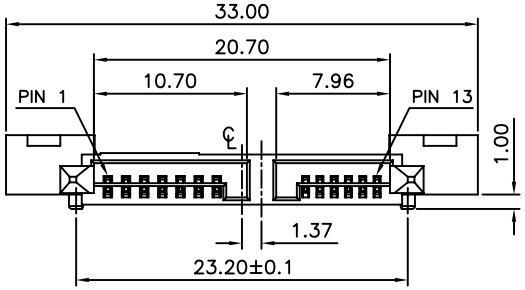

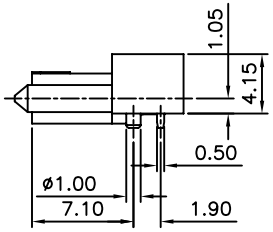

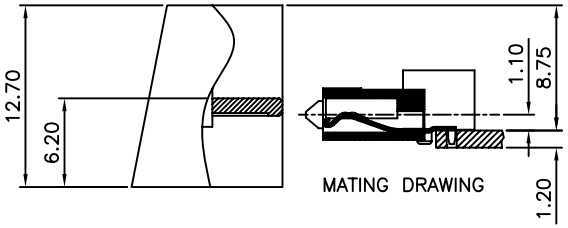

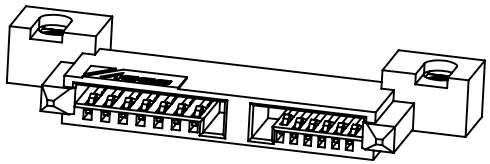

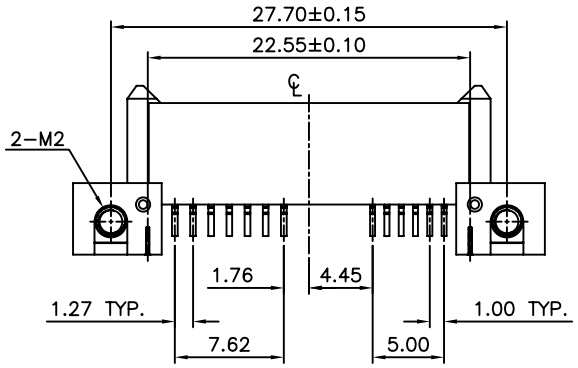

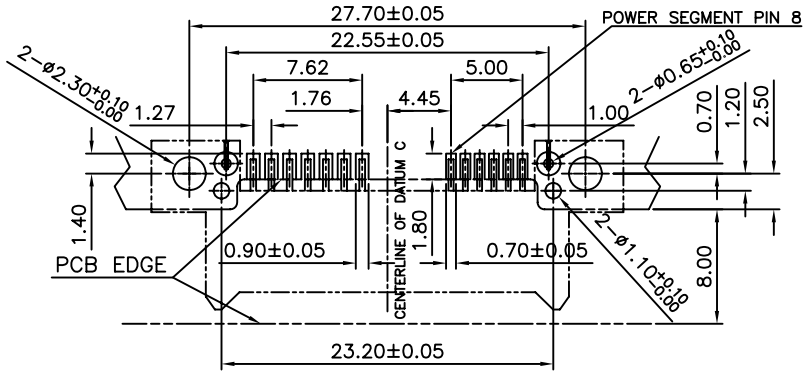

RECOMMENDED PCB LAYOUT
GENERAL TOLERANCE ±0.05 THICKNESS: 1.2mm

REV	修訂 REVISION DESCRIPTION	日期 DATE	申請人 SIGNATURE
A	修改電鍍說明(ECN-0909130)	'09/1/15	Ring
O	FOR APP970142新增無鹵料號	'08/10/15	Ring

一般公差 TOLERANCES
X. ±0.5 .XX ±0.15
.X ±0.25 .XXX ±0.1
ANGLES ±2°

檢驗尺寸標示 SYMBOLS (CR) (MJ) INDICATE CLASSIFICATION DIMENSION
(CR) MARK IS CRITICAL DIM.
(MJ) MARK IS MAJOR DIM.

表面處理 (FINISH)

宏致電子股份有限公司
Aces Electronic Co.,Ltd.

品名 (TITLE) SLIMLINE SATA RECEPTACLE SMT R/A NORMAL TYPE(H=1.05)

圖號 (DWG.NO) 50870-XXXXX-XXX

製圖 (DR) 08'/10/15 Ring
審核 (CHKD) SAM
核准 (APPD) JASON

比例 (SCALE) 2:1 | 單位 (UNITS) mm | 張數 (SHEET) 1 OF 1 | SIZE A4 | REV A